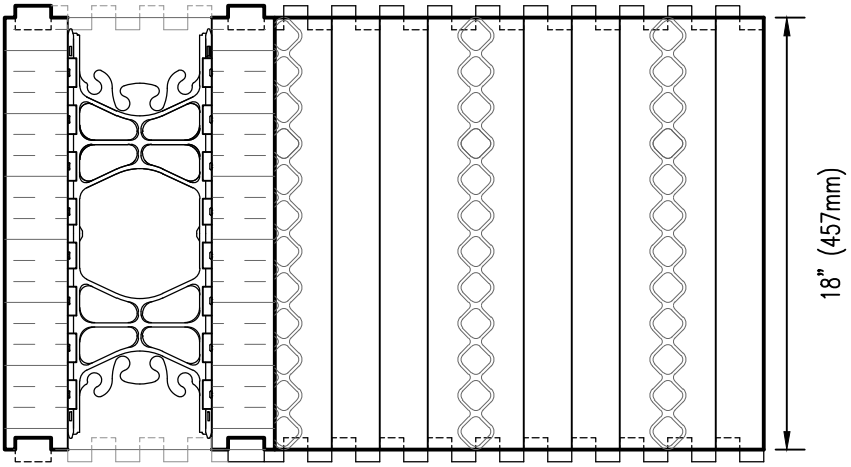

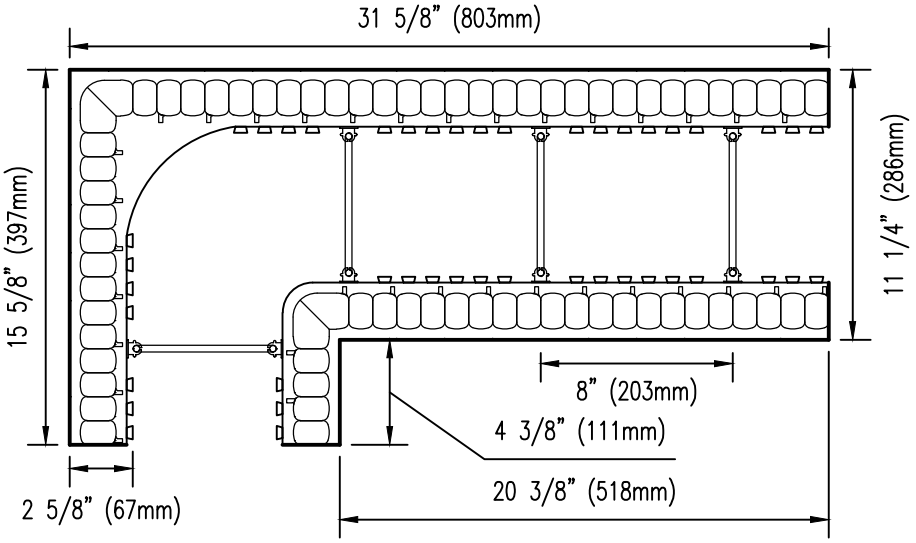

DISCLAIMER NOTICE:
SPECIFIC INFORMATION REQUIRED FOR COMPLIANCE WITH LOCAL CODES IS THE RESPONSIBILITY OF THE DESIGNER

NUDURA
INTEGRATED BUILDING TECHNOLOGY
Building Value.

NUDURA 6" (152mm)
90° CORNER FORM UNIT

REV. NO. 006 KS	DWG NO. A6A02
REV. DATE: JAN 2019	
DRAWN BY: K. STILL	SCALE: 1 : 8